Created in cooperation with Europoles GmbH & Co. KG

Söll GlideLoc®

vertical rail system

- Continuous fall protection system for fixed ladders
- Engineered for smooth operation for ascending/ descending
- Durable construction for extended service life
- Unique EN353-1:2014 certified Söll BodyControl guided type fall arresters activate for both back and downward fall situations

New!

MILLER®

by Honeywell

Söll GlideLoc® vertical rail system

Söll GlideLoc is a safe vertical climbing system permanently installed on buildings, towers, masts and several other structures.

Söll GlideLoc systems are available as ladders as well as guide rails and conform to EN353-1. They allow a combination of vertical and horizontal access without having to disconnect.

Söll GlideLoc ladders have an integrated rail for the guided-type fall arrester in the centre. They are available in aluminium, galvanised steel and stainless steel. Guide rails can also be retrofitted to existing ladders.

ROBUST FOR MORE SAFETY

- Strong rigid metal structure.
- The ladder can be used to fix a rescue device.
- The state-of-the-art Söll BodyControl fall arresters certified according to EN353-1:2014 provide greater safety through quick arrest in all fall situations, both backwards and downwards.

ROBUST FOR IMPROVED COST OF OWNERSHIP

- The rigid rail system withstands constant wear and incidental shock loads (vs. cable systems).
- The yearly inspection is easy and quick with only a few checkpoints.
- Thanks to the quality of the components, only limited repairs or replacement of parts necessary.
- The lifespan is unlimited as long as the system passes the yearly inspection.

FLEXIBILITY

- Wide range of mounting brackets allow installation on most structures.
- Customised brackets can be supplied on demand.
- There is no height limit for installation of rails on the tallest buildings, masts or towers.

CLIMBING COMFORT

- The absence of intermediate brackets allow fall arresters to slide smoothly along the rails.
- Söll BodyControl fall arresters are designed for comfortable climbing with or without leaning backwards.

A solution for all work environments and structures

The Söll GlideLoc vertical rail system withstands the effects of variable temperatures and harsh weather conditions. The design can be adapted to suit different structural or appearance requirements. It's the perfect solution for architects of modern buildings as the system is closely fixed to the substructure and has a modern look.

- **Aluminium** has a high corrosion and distortion resistance and enables a smooth surface to be created for good appearance.
- **Stainless steel** is the best solution for harsh environments such as chemical plants, food industry, offshore and industrial chimneys.
- **Hot dipped galvanised steel** is a cost effective solution for conventional applications.

AREAS OF USE

- Wind Turbines
- Telecommunications
- Utilities
- Industrial Facilities
- Drilling Rigs/Platforms
- Shipbuilding
- Crane Installation
- Confined Space

Söll® BodyControl fall arresters

WATCH THE PRODUCT VIDEO

A new generation of guided-type fall arresters designed for comfortable climbing, providing more safety in all fall situations through quick arrest. Söll BodyControl shuttles are compliant with the latest standard EN353-1:2014

Söll BodyControl I
= sternal attachment

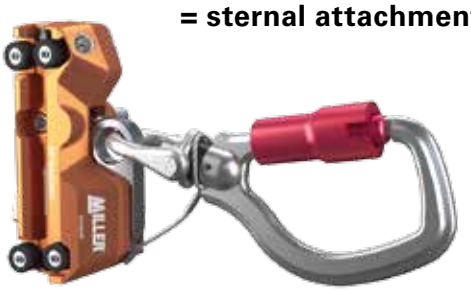

Söll BodyControl II
= sternal + ventral attachment
(EN 361 certified attachment points on harness)

HIGHEST SAFETY STANDARD

- 2 independent fall arrest functionalities activate for both back and downward fall situations.
- Quick arrest: <140mm.
- Ultra-quick arrest in case the rail has mounting holes: <70mm thanks to the additional safety nose.
- Visual fall indicator.
- Pictograms on the shuttles to ensure correct use.

BROAD APPLICABILITY

- Certified for workers: 40 – 140 kg.
- Works with inclined ladders & rails: -10° to +15°.

COMFORT

- Suspended axle mechanism (for wheels) ensures the smooth running of the device in all circumstances (including when passing joints) reducing worker fatigue.
- Ergonomic 'big and easy-to-grip' karabiner, which is easy to handle with gloves.

ROBUSTNESS AND DURABILITY

- Bigger and more robust polymer wheels: lifetime twice as long as conventional wheels.
- New shuttle housing design covers 80% of shock absorber to protect it from impacts and reduce the need for maintenance.
- Trilock karabiner can withstand « 30kN » and gate « 16kN ».

Söll BodyControl I

The sternal attachment designed for comfortable climbing close to the ladder provides more safety in all fall situations through quick arrest. It's the ideal solution for confined spaces, manholes, caged ladders.

Söll BodyControl II

The ventral attachment makes climbing more comfortable because it allows leaning backwards. The sternal strap ensures safety in all fall situations, including backwards.

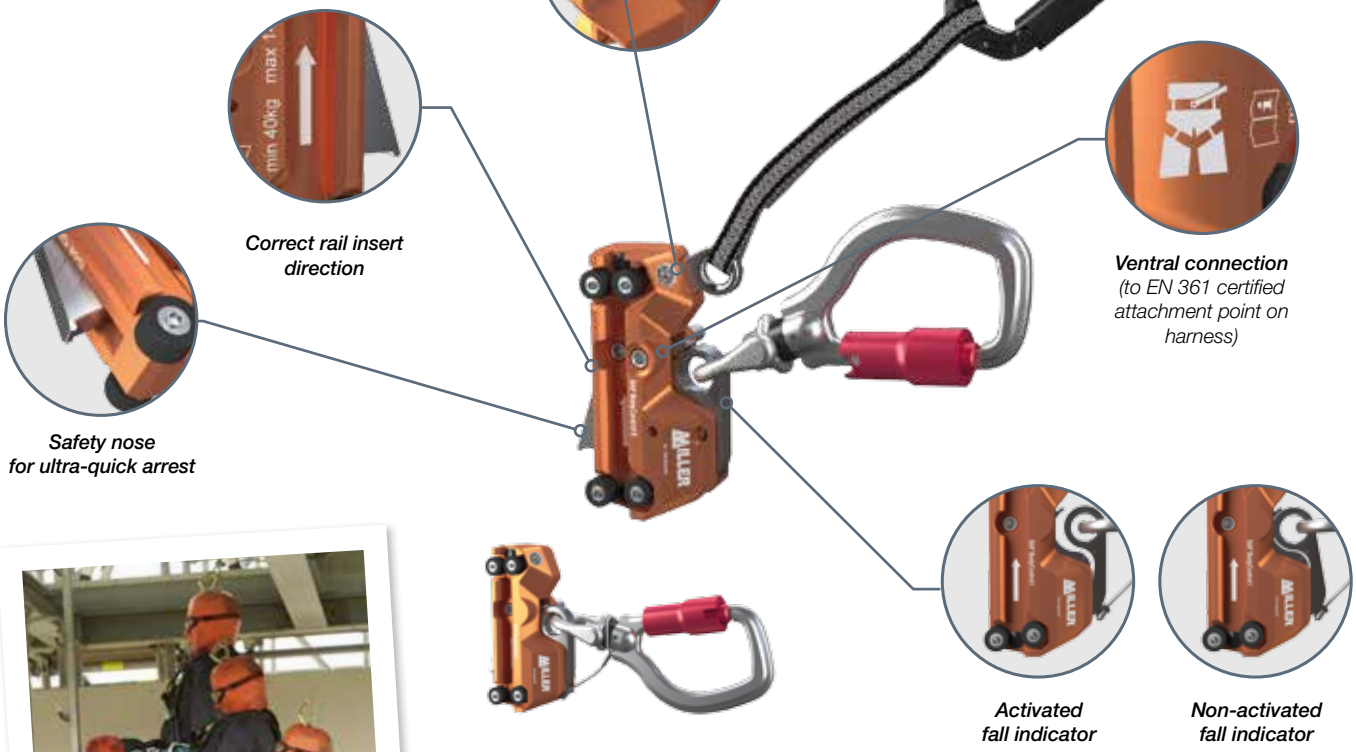

Sternal connection

Correct rail insert direction

Ventral connection *(to EN 361 certified attachment point on harness)*

Safety nose for ultra-quick arrest

Activated fall indicator

Non-activated fall indicator

ARE YOU AWARE OF BACKWARDS FALL RISKS?

- The issue of a backwards fall with potential very late or upside-down arrest has been identified as a big threat with current shuttles in the fall protection market. It's impossible to get back in an upright position alone, and as a consequence there is a risk of severe body injury.
- In the new EN 353-1:2014 standard, a back-fall function test has been added: back pull of 15kg (see EN353-1 §5.3.6).

Other shuttles available for use on Söll GlideLoc rails

Base body and safety catch are manufactured from saltwater-proof stainless steel for use in harsh environmental conditions.

- Söll Comfort²: Karabiner is also made of stainless steel
- Söll Universal II: Can be inserted and removed at any position of the rail. Karabiner is made of aluminium.

NAME	PART NUMBER	ORDER REFERENCE
Söll BodyControl I	27441	10 339 80
Söll BodyControl II	27440	10 339 81
Söll Comfort²	23331	10 276 40
Söll Universal II	25805	10 292 49

Söll GlideLoc® innovative system designs

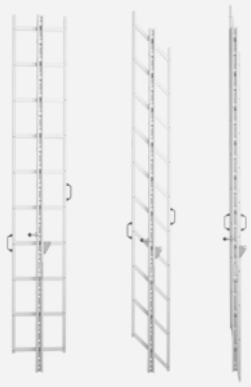

❶ Söll PivotLoc ladder
Söll PivotLoc is a foldable ladder system with incorporated GlideLoc fall protection rail. In the closed position, the rungs pivot together behind the central guide rail.

- Can be closed when not in use thus preventing unauthorised access.
- A cost effective, innovative alternative to a cover plate.
- Can be locked while working in the open state, so as to prevent an operator from being trapped accidentally.
- Once the side rails have been folded together, the ladder is very discreet (105 mm wide in the closed position) thus meeting architectural and planning requirements for an “invisible” height access system.
- Side spars are light and easy to move since their weight is counterbalanced.

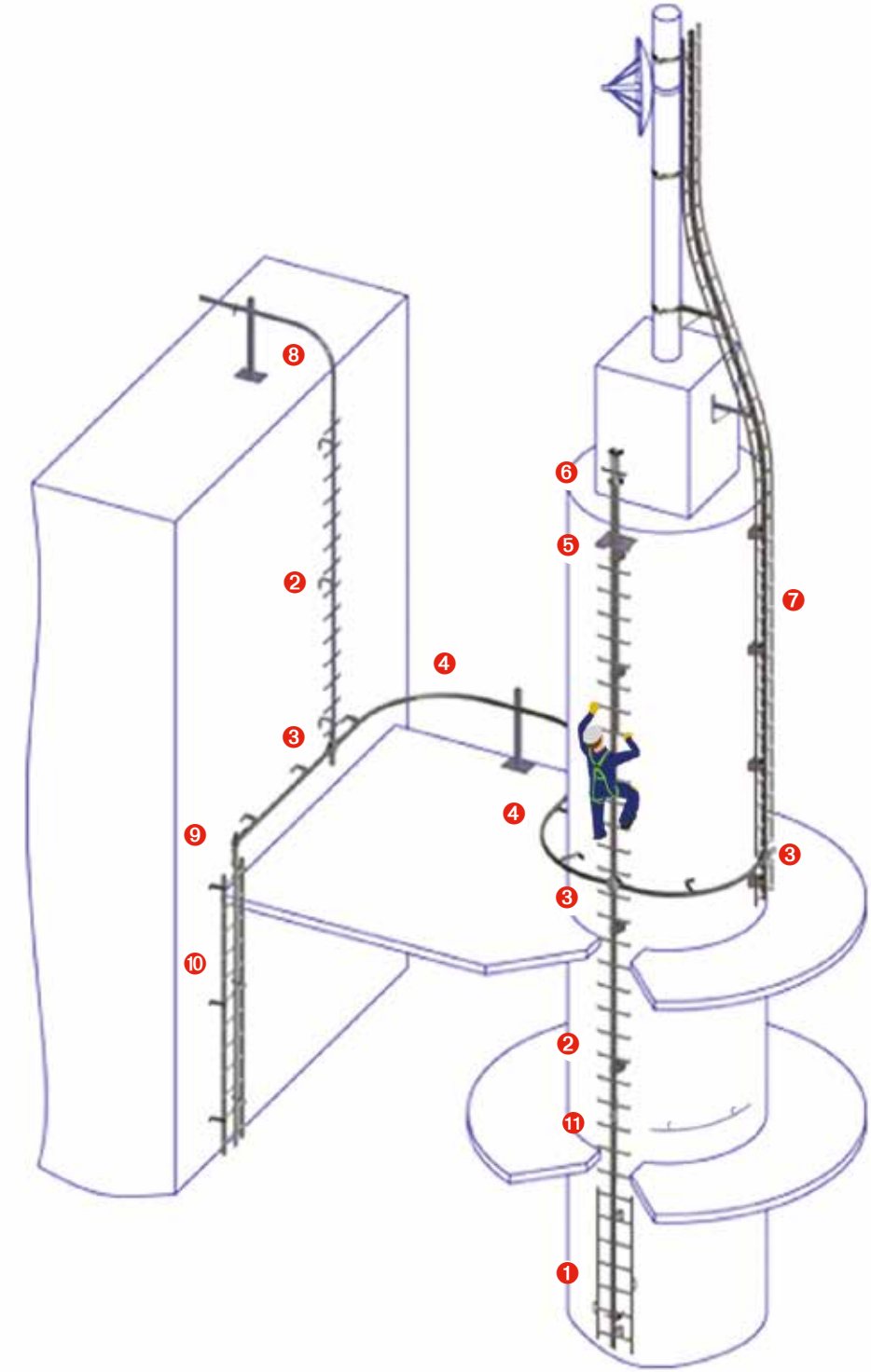

❷ Y-Spar
Cost-effective alternative. The low surface area keeps wind loads applied to the sub-structure to a minimum.

❸ Turntable
Allows safe continuous transfer from ladders to horizontal rail and vice versa without disconnecting.

❹ Horizontal guide rail
Available both straight and curved, which allows safe access along narrow platforms.

❺ Folding footrests
Must be provided as rest platforms at regular distances in case of high ascent routes for added safety.

❻ Rotary exit section
Climbers can safely access and leave the top of the guide rail while standing on the upper platform.

❼ Twin ladder
The operator can glide his hands along the side spars when ascending without having to hold onto the rungs. Ideal for dirty surroundings. Offers high distortion resistance.

❽ Twisted change-over rail
Allows a climber to move safely onto a roof or a platform away from the edge of the roof before disconnecting from the system.

❾ Ho-ver turn table
Simple means of changing direction from the end of a vertical rail to a horizontal rail and vice versa.

❿ Vertical guide rail
Can be assembled on existing ladders, step irons etc.

⓫ Exit section
A climber can detach the fall arrester from the rail after ascending and insert it into the rail before descending.

RECOMMENDED SOLUTIONS FOR GREATER SAFETY

The Söll BodyControl fall arresters have been designed to provide the best fall arrest solution in combination with the Miller Revolution harnesses. It's the ideal choice to ensure comfort and safety when working at height.

Söll BodyControl I
+ Revolution R5

Söll BodyControl II
+ Revolution R6

For more information contact:

SYSTEM CUSTOMER SERVICE
for Söll GlideLoc and BodyControl

Northern and Central Europe, Italy
Phone: +49 (0) 9281 8302 0
Email: scs-hof@honeywell.com

France, Spain, Portugal, North Africa
Phone: +33 (0)2 48 53 08 97
Email: lignedevie@honeywell.com

HONEYWELL SAFETY PRODUCTS
for Miller Revolution harnesses

UNITED KINGDOM
Honeywell Safety Products UK LTD
Phone: +44 (0) 1256 693 200
Fax: +44 (0) 1256 693 300
Email: info-uk.hsp@honeywell.com

INTERNATIONAL
Honeywell Safety Products Europe SAS
Phone: +33 (0)1 49 90 79 79
Fax: +33 (0)1 49 90 71 04
Email: info-export.hsp@honeywell.com

www.honeywellsafety.com

MILLER®
by Honeywell

12-15-722 - 12/2015
© 2015 Honeywell International Inc.

Lead them to safety – Build an enduring culture of safety through comprehensive education, innovative technologies, and comfortable, high-performance products. Honeywell Safety Products is the ideal partner for a cultural transformation that inspires workers to make safer choices on their own.

Honeywell